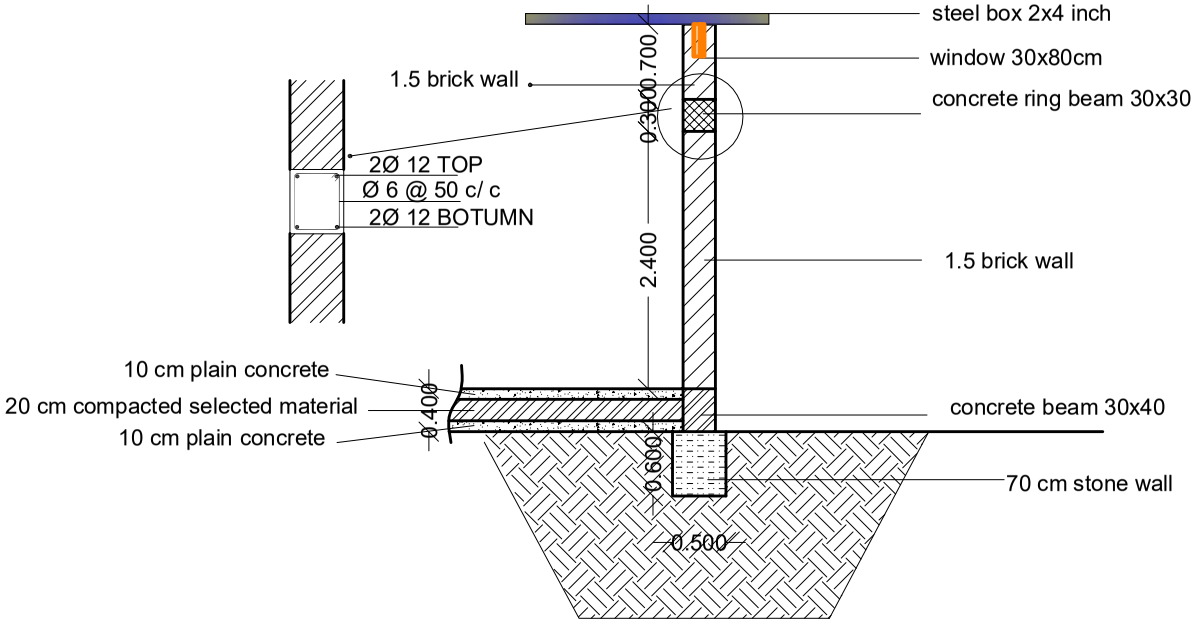

section (A- A)

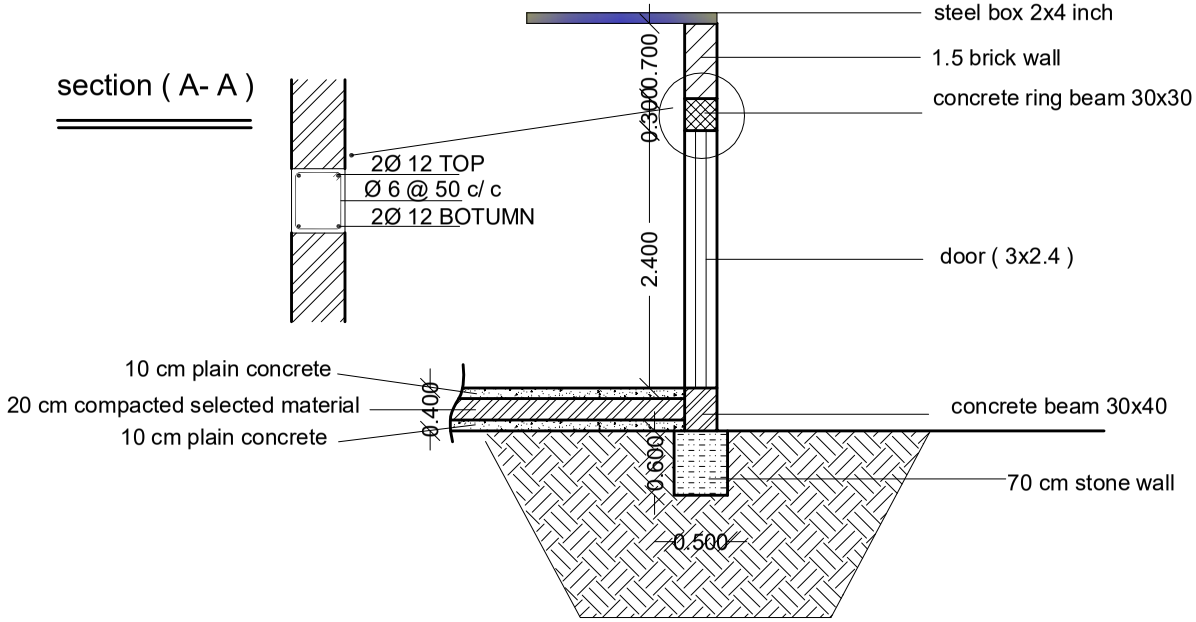

section (B- B)